EC Backward Centrifugal Fan

LWBE3G310-102PS-03

Ningbo Longwell Electric Technology CO.,LTD

NO.100, Ditang District ,Yuyao,Zhejiang Province,China 315400

Phone 86 574 6218 9863

Fax 86 574 6218 9863

sales@zjlongwell.com

www.longwellfans.com

Model No.:	LWBE3G310-102PS-03
Version Number:	A0
Make :	Jin
Review :	Zhong
Approvd :	Yao/Jiang
Date:	2023.07.12

技术专用
朗伟电器

Version number	Notes Remarks	Reason content	Revised by	Date

EC Backward Centrifugal Fan

LWBE3G310-102PS-03

Nominal Data

Project1	Unit	Rating
Nominal Voltage :	[VAC]	230
Voltage Range :	[VAC]	176~264
Frequency :	[Hz]	50/60
Speed :	[rpm]	2960
Current :	[A]	3.1
Power input :	[W]	700
Air flow (Max) :	[m3/h]	4120
	[CFM]	2424
Static pressure (Max) :	[Pa]	1082
Noise level (LpA):	dB(A)	85
Max.ambient Temp :	℃	60
Min.ambient Temp :	℃	-25
Insulation Class :		Class F
Protection Type :		IP55
Work system :		S1

Technical Features

Production Reference standard	GB12350《Safety requirements of small power motors》 JB/T10563 《technical specification for general purposes centrifugal fans》 EN60335-1《Household and similar electrical appliances-safety》 ISO5801-1997《Industrial fans-performance testing using standardized airways》 GB/T2888《Methods of Noise Measurement for Fans Blowers Compressors and Roots Blowers》
Certification	CE ETL (UL 507:2017 Ed.10+R:27May2020，CSA C22.2#113:2018 Ed.11)
Environmental protection	RoHS、Reach

NINGBO LONGWELL ELECTRIC TECHNOLOGY CO.,LTD
Phone: 0086 574 6218 9863 FAX : 0086 574 6218 9863 www.longwellfans.com sales@zjlongwell.com

EC Backward Centrifugal Fan

LWBE3G310-102PS-03

Technical Features

Service environment	Operating temperature：-25~60℃；Operating humidity：5 ~ 90 % RH Storing temperature：-40 ~ 80℃；Storing humidity：≤95 % RH Applicable altitude range：＜1000m
Life Expectance	40,000Hours(L10)，At 40℃ room, humidity 15%~65%RH.
Balancing	According to JB/T 9101-1999 requirements G6.3
Vibration of the fan	Test method accord with JB/T 8689
Installation method	Horizontal or vertical installation
Material	Aluminum Alloy （Impeller）
Bearing	Maintenance-free deep groove ball bearings
Weight	APPROX 14 (Kg)

Electrical Protection

Speed Control	Control input 0~10VDC/PWM/RS485
VSP Control	Control signal VSP voltage range1VDC~9.5VDC (During normal operation, when the VSP voltage is below 0.8VDC, the motor switches from operating mode to standby mode)
PWM Control	PWM signal: frequency 1K ~ 10KHz, amplitude 10V,duty cycle 10% ~ 100% .
Signal Output	Tach output：5 Pulse/R；FG internal open circuit output, external pull-up resistor R, pull-up voltage V+
Auxiliary power output	Output 10VDC，Max Current 10mA
Protection	Current limiting protection 、Over-temperature protection、Over-current protection Locked-rotor protection
Soft start	Delay time <30 seconds to full speed
Serial Communication	LWRS485-02

NINGBO LONGWELL ELECTRIC TECHNOLOGY CO.,LTD
Phone: 0086 574 6218 9863 FAX : 0086 574 6218 9863 www.longwellfans.com sales@zjlongwell.com

EC Backward Centrifugal Fan

LWBE3G310-102PS-03

Product Drawing

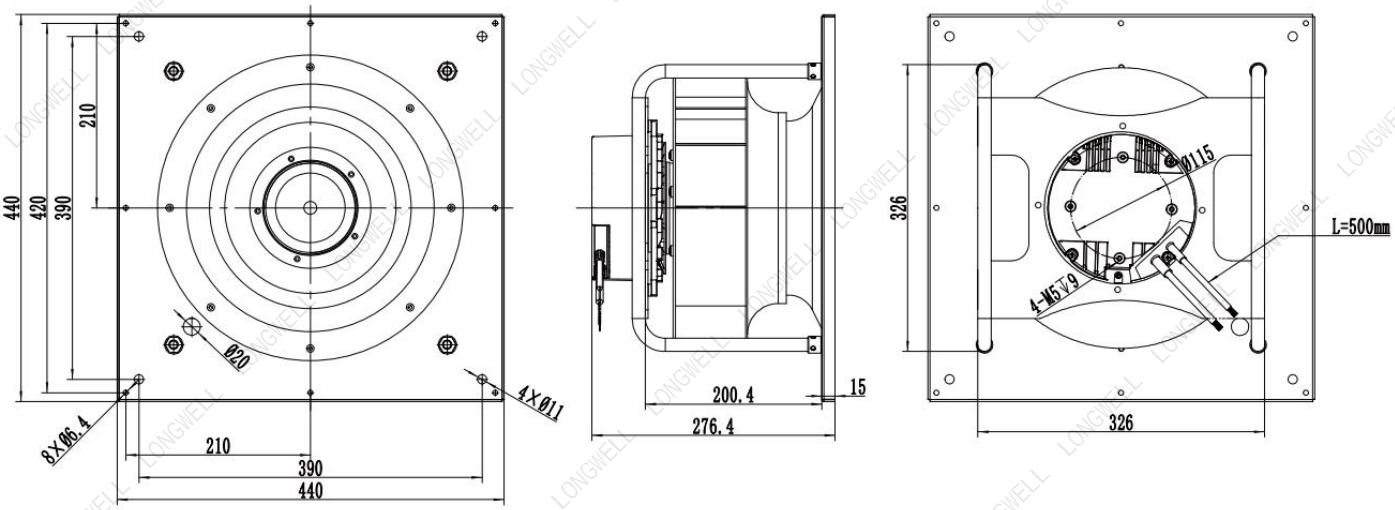

NINGBO LONGWELL ELECTRIC TECHNOLOGY CO.,LTD
Phone: 0086 574 6218 9863 FAX : 0086 574 6218 9863 www.longwellfans.com sales@zjlongwell.com

EC Backward Centrifugal Fan

LWBE3G310-102PS-03

Wiring Diagram

L	Color	Function	Functional description
L1	Yellow/Green	PE	Ground lead
	Brown	L	Live line
	Black	N	Naught line
	White	NC	Status relay, normally turn-off； break with error
	Gray	COM	The normally closedterminal of the relay is closed with COMduring normal operation or not poweredon,when the fan fails,it is disconnectedfrom COM.
L2	Brown	RS485A	Bus connection RS485; RSA;MODBUS RTU
	Gray	RS485B	Bus connection RS485; RSB;MODBUS RTU
	Yellow	Speed Control	Speed regulation signal input terminal,0-10VDC voltage /PWM
	White	FG	Velocity feedback pulse output 5 Pulse/R
	Red	+10VDC	Fixed voltage output 10VDC,≦10mA
	Blue	GND	Ground reference end of control signal

Label

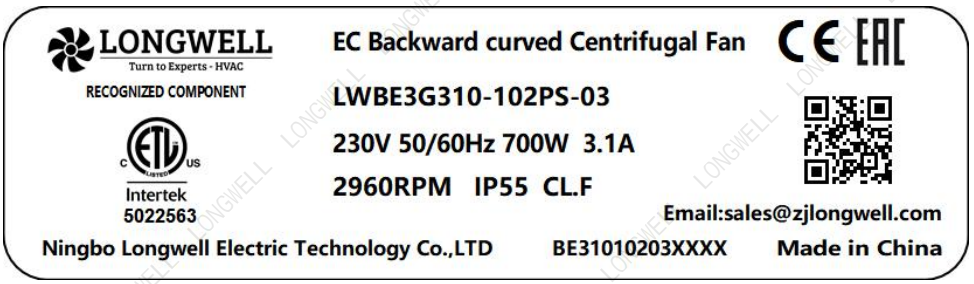

NINGBO LONGWELL ELECTRIC TECHNOLOGY CO.,LTD
Phone: 0086 574 6218 9863 FAX : 0086 574 6218 9863 www.longwellfans.com sales@zjlongwell.com

EC Backward Centrifugal Fan	LWBE3G310-102PS-03

Charts :Air Flow (P-Q)

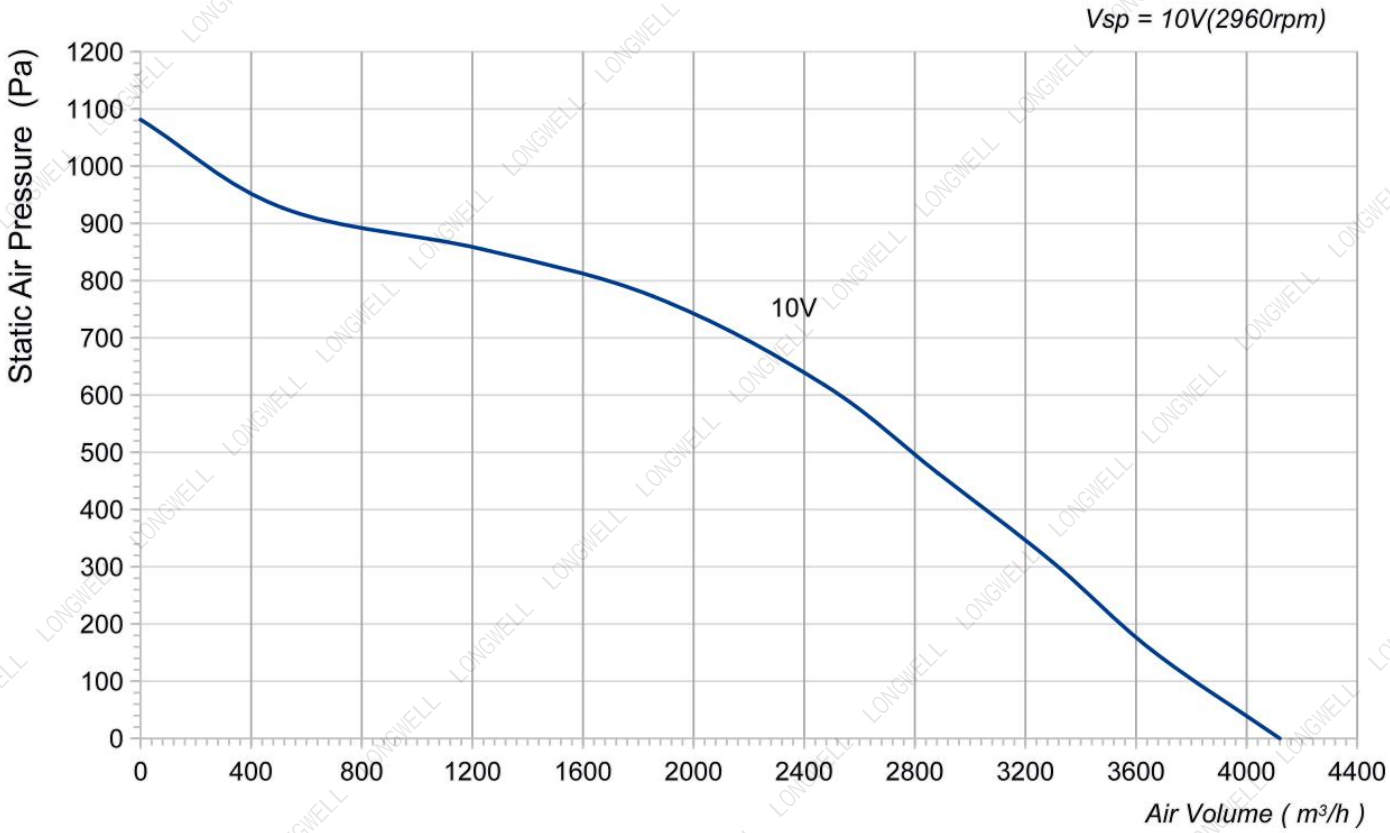

NINGBO LONGWELL ELECTRIC TECHNOLOGY CO.,LTD
Phone: 0086 574 6218 9863 FAX : 0086 574 6218 9863 www.longwellfans.com sales@zjlongwell.com

EC Backward Centrifugal Fan

LWBE3G310-102PS-03

Warning:

1.The fan and motor must be used within the prescribed scope of temperature and humidity otherwise it will cause an unexpected damage.

2. Fan is not set wrong connection protection，Provide the right voltage and line sequence according to the nameplate otherwise it will damage the product.

3. Wiring depends on the wiring diagram and please connect the earth ground if required. We don't suggest to use the extension cord .Any wrong connection may cause the damage of the fan.

4. Be careful when moving the fan and do not take the blades as a handle because it will cause the distortion and chatter.

5. Connect the thermostat if required otherwise it would damage the motor because of the over temperature.

6. The length of the mounting screws shall not exceed the requirement, otherwise the fan will be damaged.

7. Do not disassemble the fan arbitrarily. It may hurt the capacity of water tightness and dynamic balance or cause other serious problems.

8. The over current protector is necessary in case the damage from the over current.

9. Install the fan as required, any other installing direction would affect the service life of the product.

10. The fan with inlet ring should be installed follow the requirements or it will affect the performance.

11. Users should use the standard cable when install the fan otherwise it will affect the water tightness.

12. The fan should keep away from the children especially the blade and electric parts .And the children are not allowed to operate the fan alone.

13. Do not connect the white signal cable directly to the red signal cable or the external DC power supply. Otherwise, the fan may be damaged.T

14.Please do not perform extraction and insertion of the connector under revolution irrespective of power on and power on and power off , and the fan should not touch or move when running.

15. Do not lift the fan wire when taking the fan, and do not impact the bearing during the handling process.

16. The version change may not be notified, please ask our company for the latest version when necessary.

17.Please be informed that we are not responsible for any damage or accidents caused by violating above rules to install and operate the fan.

NINGBO LONGWELL ELECTRIC TECHNOLOGY CO.,LTD
Phone: 0086 574 6218 9863 FAX : 0086 574 6218 9863 www.longwellfans.com sales@zjlongwell.com

EC Backward Centrifugal Fan	LWBE3G310-102PS-03

Approval

CUSTOMER APPROVAL

CUSTOMER SIGNATURE:	DATE :

Product Data Confirm :

Speed Control System :

☐ PWM ☐ 0-10V ☐ Rs485

Accessories:

☐ Air Inlet Cone ☐ Pressure nozzle ☐ Custom wire length

Note :Please check and mark the data when you sign the specification sheet .

NINGBO LONGWELL ELECTRIC TECHNOLOGY CO.,LTD
Phone: 0086 574 6218 9863 FAX : 0086 574 6218 9863 www.longwellfans.com sales@zjlongwell.com